HARDWARE HACKATHON ROUND 1

-Smart MedBot-

TEAM ID: QXHH-30

TEAM NAME: QXHH-30_V^2T/R

Varun V **Taksha Tangudu** **Vijhortha VS** **Raja R**

PROBLEM UNDERSTANDING & PROPOSED IDEA

Problem

- Time delays in gathering requests from patients
- Heavy workload for employees
- Small hospitals lack automation.

Solution

- Autonomous robot that follows a line
- Stops in each room and looks for requests.
- Distance-based classification: Normal/Urgent
- Reports with a buzzer and RGB LED

Innovation

- Detection of priority (urgent vs. normal)
- Navigation that is aware of obstacles
- Scalable and inexpensive

Outcome

- Quicker communication based on priority
- Decreased manual labor and errors

SYSTEM ARCHITECTURE/ WORKING

1. **Request Detection**

- Ultrasonic sensor measures distance
- <10 cm → Urgent request
- 10–20 cm → Normal request
- No object → No request

2. **Robot Navigation**

- IR sensors detect line path
- Robot follows path using motor driver and wheels
- Stops at each room checkpoint

3. **Data Processing**

- Arduino counts total requests
- Separates urgent & normal
- Stores data during traversal

4. **Output**

At pharmacy:

RGB LED → Urgent

RGB LED → Normal

Buzzer: Fast beeps → Urgent count

Slow beeps → Normal count

CIRCUIT DIAGRAM

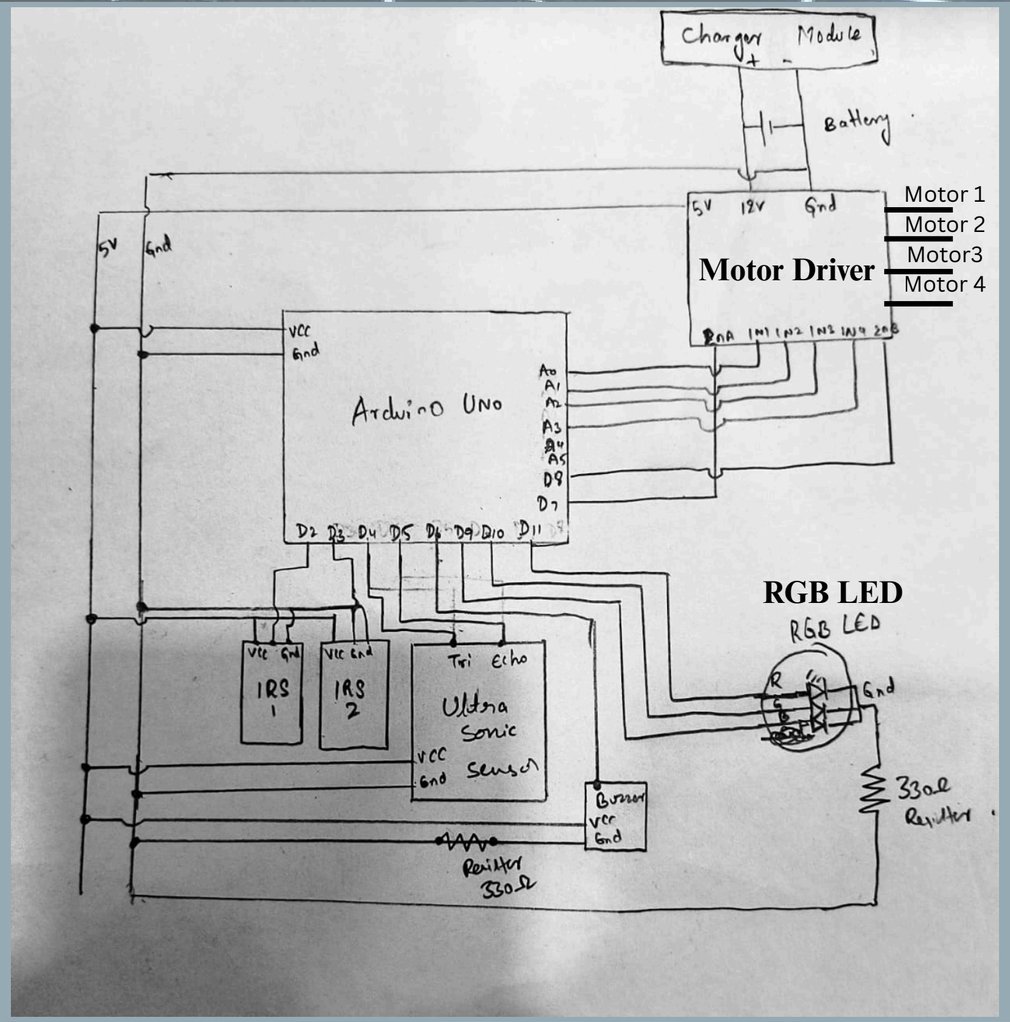

INNOVATION, FEASIBILITY & OUTPUT

1. ***Innovation***

- Priority-based request system (Urgent vs Normal)
- Distance-based intelligent detection
- Combined visual + audio reporting (RGB LED + Buzzer)

2. ***Feasibility***

- Uses simple, low-cost components (Arduino, IR, Ultrasonic)
- Minimal wiring & reliable logic
- Fully scalable for real hospital environments

INNOVATION, FEASIBILITY & OUTPUT

3. ***Expected Output***

- Robot follows path and stops at each room
- Detects and classifies requests accurately
- Reaches pharmacy and reports total requests
- Clear indication using LED colors and buzzer sounds

4. ***Robot Behavior***

- Smooth line-following navigation
- Stops briefly at every room
- Detects request using ultrasonic sensor

5. ***Request Counting & Display***

- Arduino maintains count of:
- Urgent requests
- Normal requests
- RGB LED shows request type
- Buzzer: Fast beeps → Urgent count
  Slow beeps → Normal count

NEW HORIZON COLLEGE

SILVER HORIZONS 25 YEARS OF GLOBAL LEARNING

NEW HORIZON COLLEGE OF ENGINEERING

QUANTUM X-26

IEEE NHCE STUDENT BRANCH

Thank you!